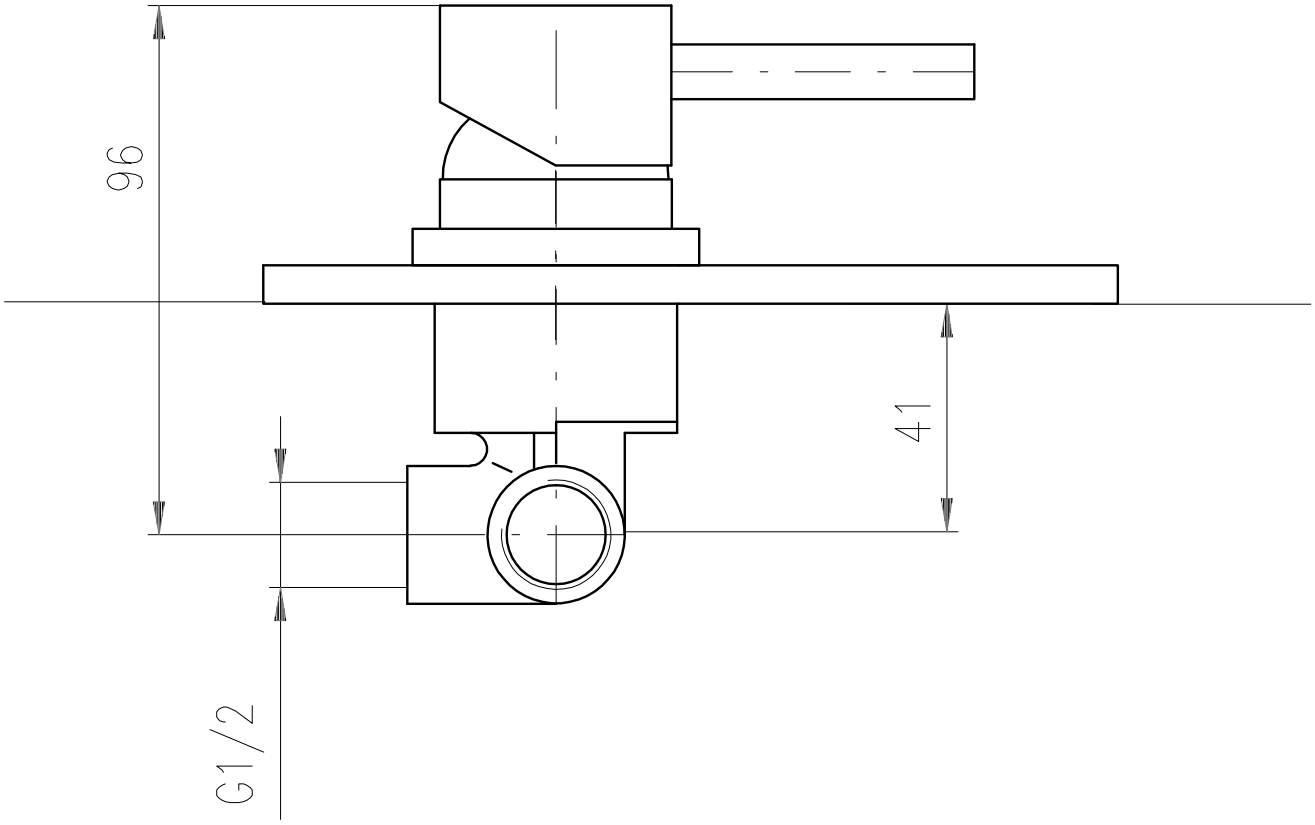
96
41
G1/2

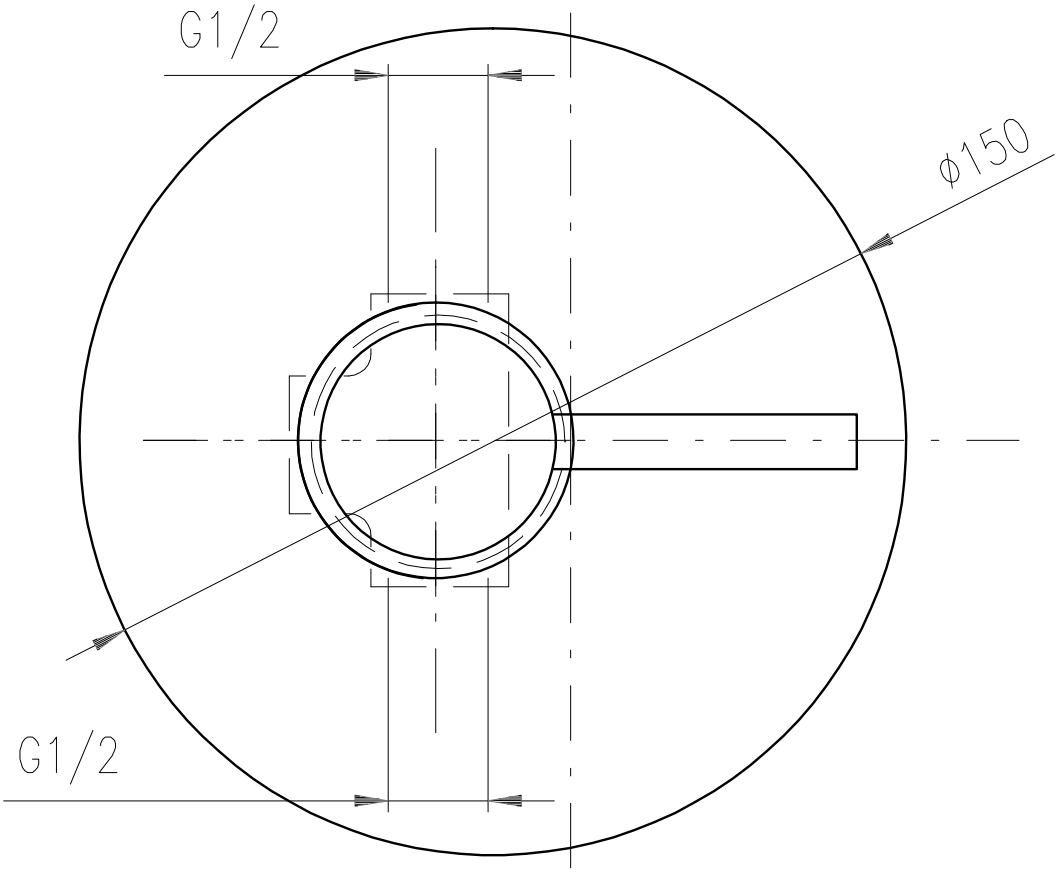
G1/2
ø150
G1/2