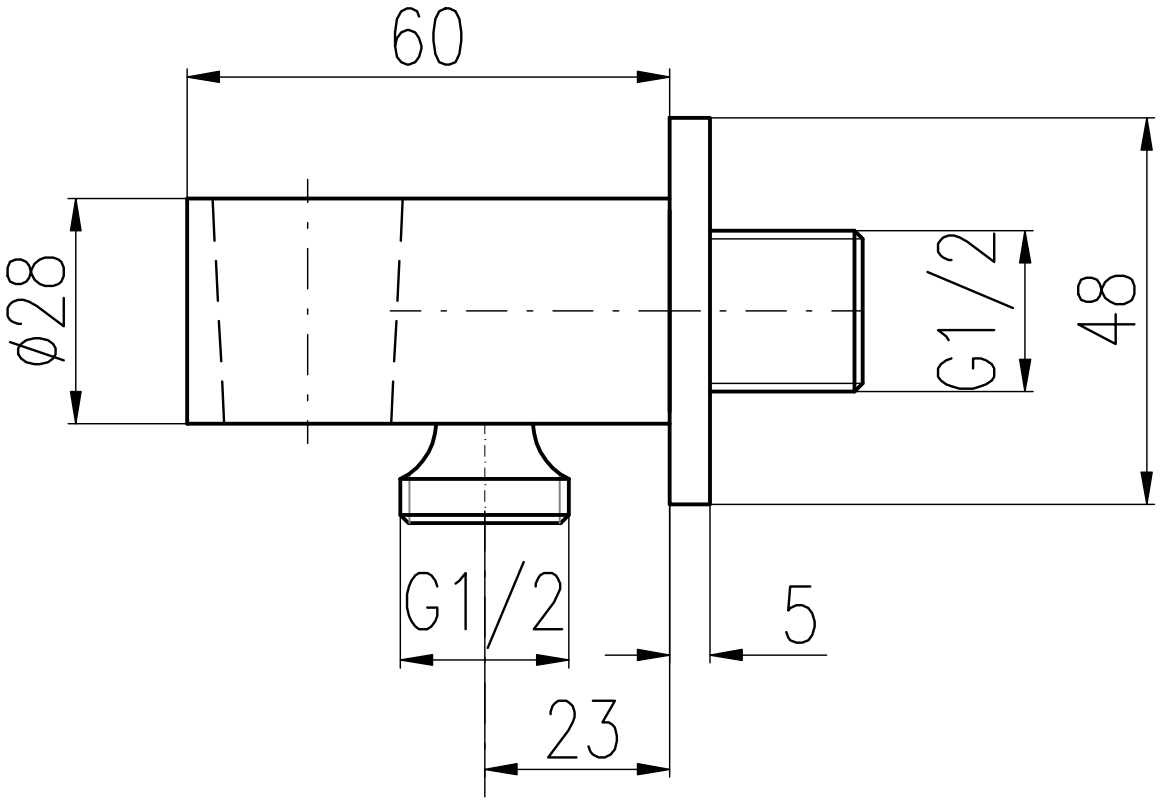
60
ϕ28
G1/2
48
G1/2
5
23

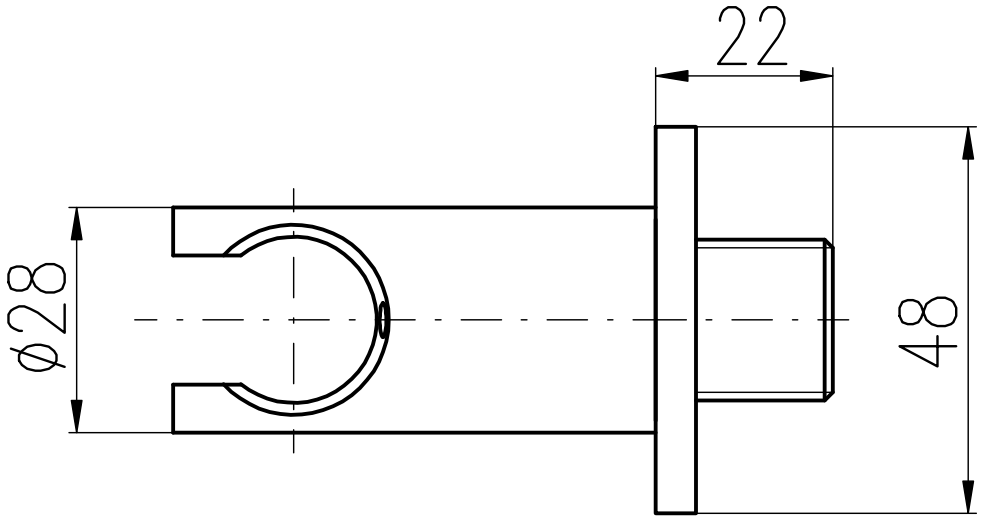
22
ϕ28
48