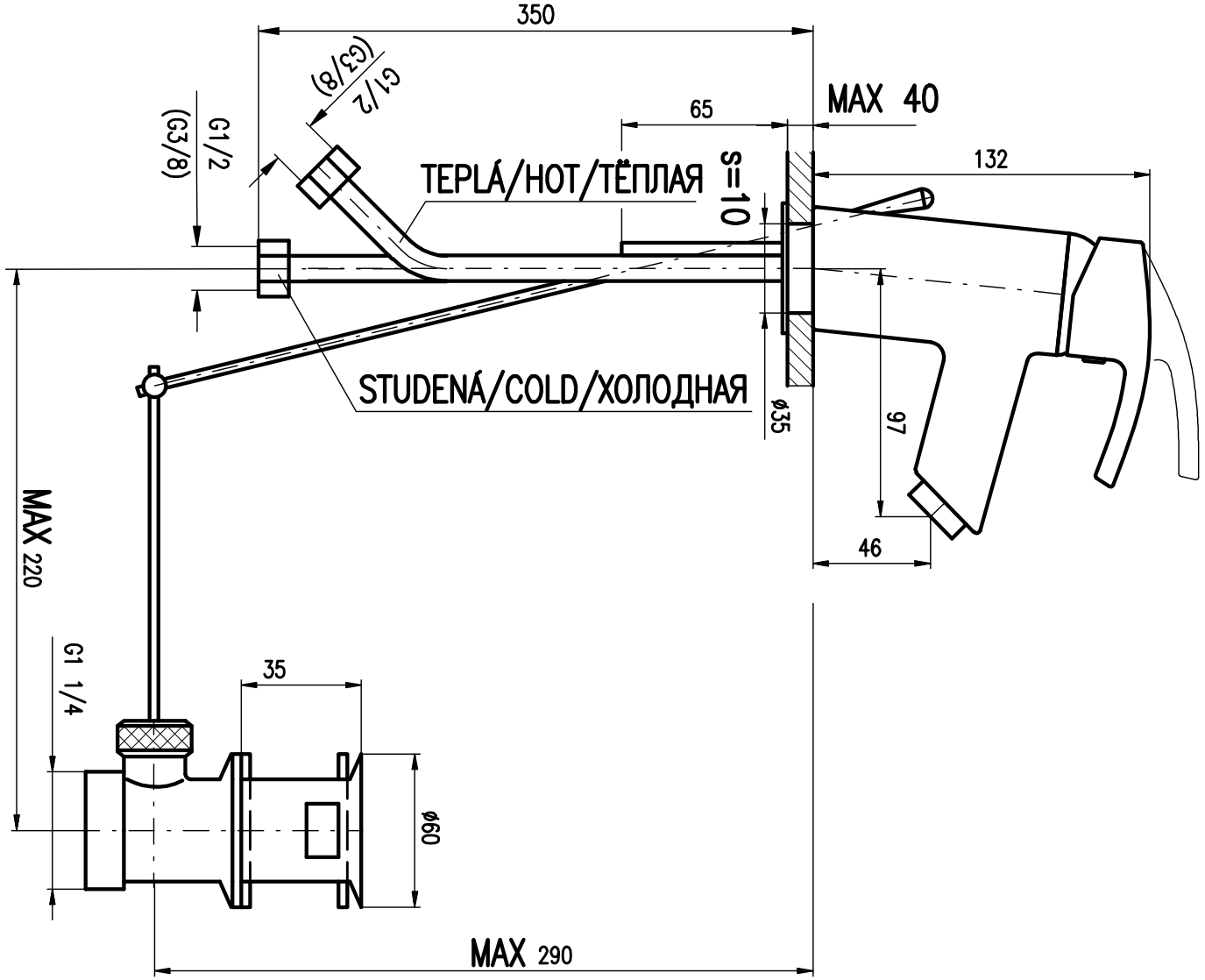
350
G1/2
(G3/8)
G1/2
(G3/8)
65
MAX 40
132
TEPLÁ/HOT/ТЁПЛАЯ
s=10
STUDENÁ/COLD/ХОЛОДНАЯ
ø35
97
46
MAX 220
G1 1/4
35
ø60
MAX 290