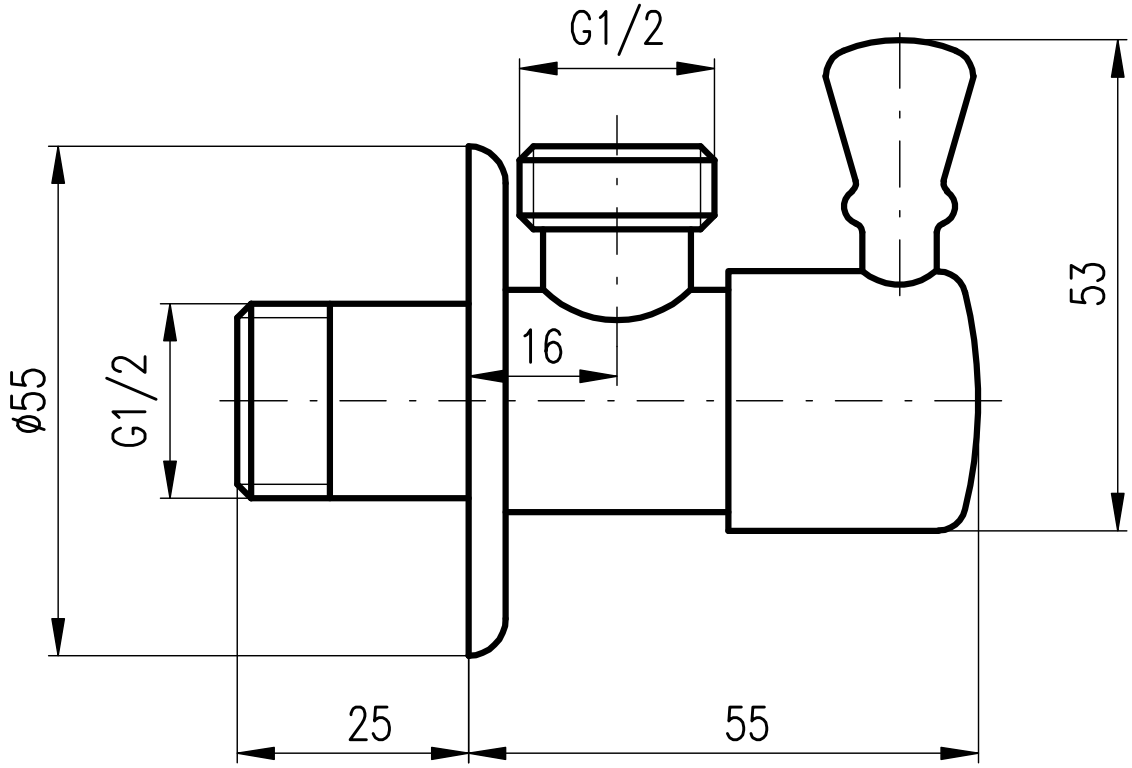
G1/2
53
16
ø55
G1/2
25
55